XGW Tech

ADR-480 series

480W single output with PFC function Industrial DIN RAIL



Features:

- Universal AC input 90~264VAC
- Built in active PFC function
- Protections: Short circuit / Overload / Over voltage
  Over temperature
- Can be installed on DIN rail TS-35/7.5 or 15
- The body width is 50mm
- 100% full load burn-in test
- LED indicator for power on
- DC OK relay contact(Options)
- Redundancy function(ADR-480R)
- High efficiency/high reliability
- 3 years warranty
- Compliance to IEC/EN/UL 62368-1

Specification

MODEL		ADR-480-12	ADR-480-15	ADR-480-24	ADR-480-36	ADR-480-48
INPUT	VOLTAGE RANGE	90～264VAC (Refer to "Static characteristics") 127～370VDC(Options)				
	FREQUENCY RANGE	47～63Hz				
	Power factor(Typ.)	PF>0.98/115VAC PF>0.96/230VAC Full-load				
	EFFICIENCY(Typ.)	93.5%	93.5%	94.5%	94.5%	95%
	AC CURRENT(Typ.)	5A/115VAC 3.2A/230VAC				
	INRUSH CURRENT(Typ.)	20A/115VAC 45A/230VAC (cold start)				
	LEAKAGE CURRENT	<2mA/240VAC				
OUTPUT	DC VOLTAGE	12V	15V	24V	36V	48V
	RATED CURRENT	27A	25A	20A	13.3A	10A
	CURRENT RANGE	0～27A	0～25A	0～20A	0～13.3A	0～10A
	RATED POWER	324W	375W	480W	478.8W	480W
	RIPPLE&NOISE (max.)	150mVp-p	150mVp-p	150mVp-p	200mVp-p	200mVp-p
	VOLTAGE ADJ.RANGE	12～14V	15～17V	24～28V	36～42V	48～55V
	VOLTAGE TOLERANCE	±1%	±1%	±1%	±1%	±1%
	LINE REGULATION	±0.5%	±0.5%	±0.5%	±0.5%	±0.5%
	LOAD REGULATION	±2%	±2%	±1%	±1%	±1%
	SETUP, RISE TIME	1000ms,50ms/230VAC 1000ms,50ms/115VAC				
	HOLD UP TIME(Typ.)	14ms/230VAC 14ms/115VAC				
PROTECTION	OVER LOAD	125%～170% rated output power				
		Protection Mode: hiccup mode，recovers automatically after fault condition is removed				
	OVER VOLTAGE	15～18V	20～24V	29～35V	45～50V	56～65V
		Protection mode: Shut down, recovers after repower on				
	OVER TEMPERATURE	Protection mode: Shut down, recovers after temperature drop				
FUNCTION	DC OK SIGNAL(OPTIONS)	Contact specifications (max.):30VDC/1A Resistive load				
	REDUNDANCY(ADR-480R)	Protection for parallel redundancy use: In parallel redundancy applications, when one power supply experiences abnormal shutdown, the other power supply will automatically activate. This can prevent system crashes and increase system reliability.				
ENVIRONIMENT	WORKING TEMP.,HUMIDITY	-30～+70℃ (Refer to "Derating curve") , 20～90%RH non-condensing				
	STORAGE TEMP.,HUMIDITY	-40～+85℃, 10～95%RH				
	TEMP. COEFFICIENT	±0.03%/℃ (0～50℃)				
	VIBRATION	10～500Hz, 2G 10min./1 cycle, each along X、Y、Z axes				

XGW Tech
ADR-480 series

480W single output with PFC function Industrial DIN RAIL

Safety and electromagnetic compatibility	Safety standards	Refer to UL62368-1,TUV EN62368-1,CCC GB4943.1		
	Withstand voltage and isolation resistance	I/P-O/P: 3KVac; 100MΩ / 500Vdc / 25℃ / 70%RH		
		I/P-FG: 2KVac; 100MΩ / 500Vdc / 25℃ / 70%RH		
		O/P-FG: 0.5KVac; 100MΩ / 500Vdc / 25℃ / 70%RH		
	Electromagnetic compatibility emission	**Parameter**	**Standard**	**Test Level / Note**
		Conducted emission	BS EN/EN55032(CISPR32),FCC PART 15 / CISPR22 ,GB9254.1	Class B
		Radiated emission	BS EN/EN55032(CISPR32),FCC PART 15 / CISPR22 ,GB9254.1	Class B
		Harmonic current	BS EN/EN61000-3-2,GB17625.1	Class A
		Voltage flicker	BS EN/EN61000-3-3	----
	Electromagnetic compatibility immunity	BS EN/EN55035		
		Parameter	**Standard**	**Test Level /Note**
		ESD	BS EN/EN61000-4-2	Level 4, 8KV air, Level 2, 4KV contact, criteria A
		RF field susceptibility	BS EN/EN61000-4-3	Level 3, criteria A
		EFT bursts	BS EN/EN61000-4-4	Level 3, criteria A
		Surge susceptibility	BS EN/EN61000-4-5	Level 3, 1KV/L-N, 2KV/L/N-FG criteria A
		Conducted susceptibility	BS EN/EN61000-4-6	Level 3, criteria A
		Magnetic field immunity	BS EN/EN61000-4-8	Level 4, criteria A
		Voltage dips and interruptions	BS EN/EN61000-4-11	>95% dip 0.5 periods, 30% dip 25 periods , >95% interruptions 250 periods
OTHERS	MTBF	≥200Khrs MIL-HDBK-217F(25℃)		
	DIMENSION	50*125.1*110mm(W*H*D)		
	PACKING	0.97Kg; 12pcs/ 12.6Kg/ 0.63CUFT		
NOTE	1. All parameters NOT specially mentioned are measured at 230VAC input, rated load and 25℃ of ambient temperature. 2. Ripple & noise are measured at 20MHz of bandwidth by using a 12" twisted pair-wire terminated with a 0.1uF & 47uF parallel capacitor. 3. Tolerance: includes set up tolerance, line regulation and load regulation. 4. Line regulation is measured from low line to high line at rated load. 5. Load regulation is measured from 0% to 100% rated load. 6. Length of set up time is measured at cold first start, Turning ON/OFF the power supply very quickly may lead to increase of the set up time. 7. The ambient temperature derating of 5℃/1000m is needed for operating altitude great than 2000m(6500ft). 8. The power supply is considered a component which will be installed into a final equipment. All the EMC tests are been executed by mounting the unit on a 360mm*360mm metal plate with 1mm of thickness. The final equipment must be re-confirmed that it still meets EMC directives. 9. Installation clearances:40mm on top,20mm on the bottom,5mm on the left and right side are recommended when loaded permanently with full power. In case the adjacent device is a heat source, 15mm clearance is recommended.			

Mechanical specification

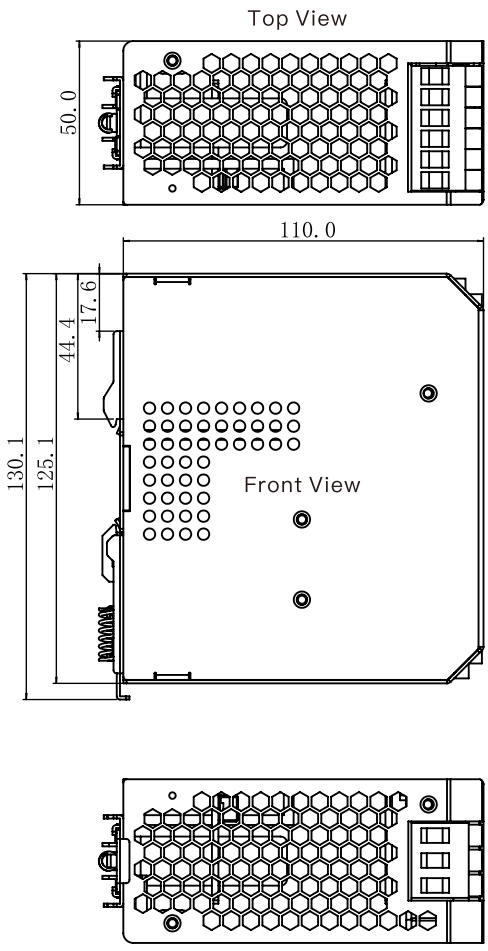

NOTE:
Unit: mm
ADJ:Output adjustable resistor
TOL: ±1.00

ADMISSIBLE DIN-RAIL:TS35/7.5 或 TS35/15

Terminal Pin No. Assignment

TB1		TB2	
Pin No.	Assignment	Pin No.	Assignment
1	AC/L		
2	AC/N	1,2,3	DC output -V
3	FG	4,5,6	DC output +V

XGW Tech

ADR-480 series

480W single output with PFC function Industrial DIN RAIL

Block diagram

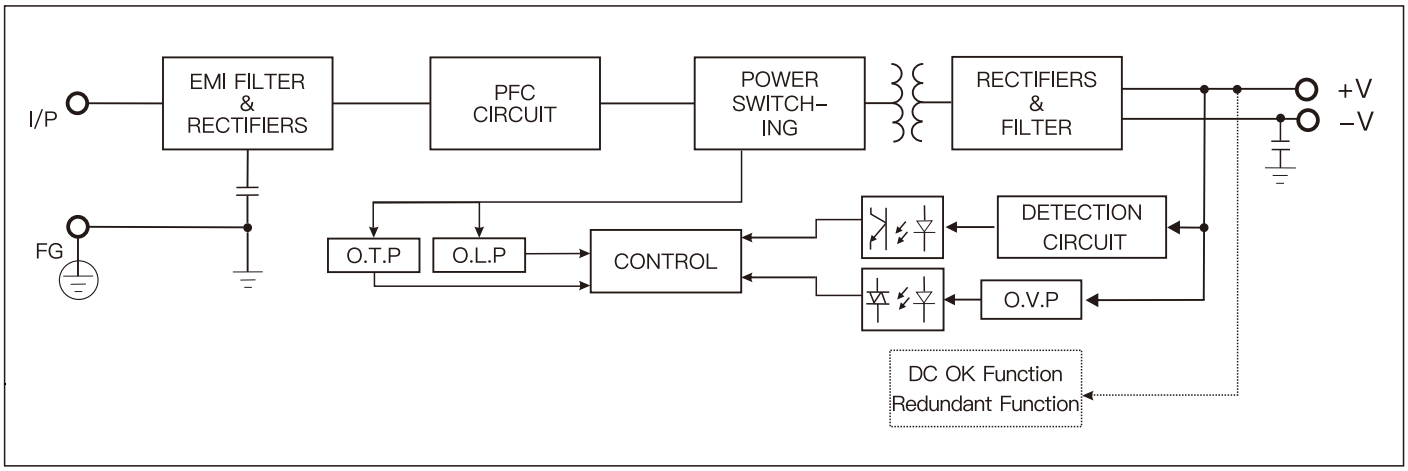

Derating curve

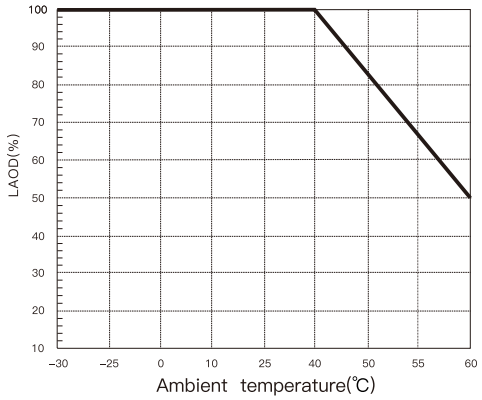

Static characteristics

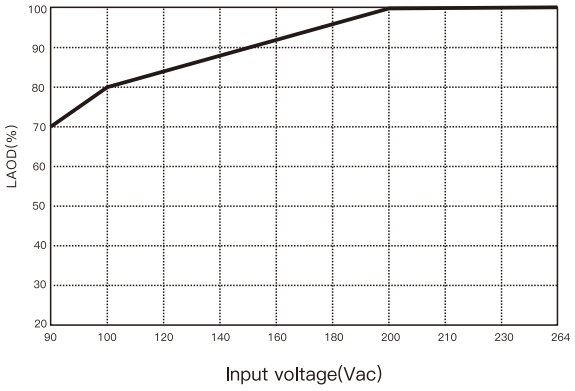

DC OK Relay Contact(Options)

Contact closure	Power on/DC ok
Contact open	Power off/DC fail
Contact specifications (max.)	30V/1A Resistive load

Redundancy function(ADR-480R)

1, ADR-480R Built in redundancy function, capable of parallel connection of 2 single machines
2, When running in parallel, the maximum load should not exceed the rated power of any one power source

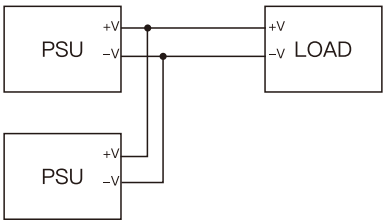

CONTACT XGW

XGW Digital Technology (Shenzhen) Co., Ltd.

Email: sales@xgwtech.com

Tel / WhatsApp / WeChat: +86 15012788278

Web: www.xgwtech.com

LinkedIn: linkedin.com/in/leddriverandenergystoragesystem/

LED drivers & power supplies | UPS & LiFePO4 / ESS batteries

Manufacturer with two owned factories in Shenzhen and Zhongshan.

OEM/ODM - custom & project development welcomed; 3-7 day samples.