XGW Tech

240W single output with PFC function Industrial DIN RAIL



Features:

- Universal AC input 90~264VAC
- Built in active PFC function
- High efficiency up to95%, Low leakage current<0.5mA/240VAC
- Protections: Short circuit / Overload / Over voltage
  Over temperature
- Can be installed on DIN rail TS-35/7.5 or 15
- The body width is only 30mm
- 100% full load burn-in test
- LED indicator for power on
- Redundancy function(ADR-240R)
- DC OK relay contact(Options)
- High reliability
- 3 years warranty
- Compliance to IEC/EN/UL 62368-1

Specification

MODEL		ADR-240-12	ADR-240-24	ADR-240-48
INPUT	VOLTAGE RANGE	90～264VAC (Refer to "Static characteristics") 127～370VDC(Options)		
	FREQUENCY RANGE	47～63Hz		
	POWER FACTOR(Typ.)	PF>0.99/115VAC PF>0.95/230VAC Full-load		
	EFFICIENCY(Typ.)	93.5%	94.5%	95%
	AC CURRENT(Typ.)	3A/115VAC 1.5A/230VAC		
	INRUSH CURRENT(Typ.)	23A/115VAC 45A/230VAC (cold start)		
	LEAKAGE CURRENT	<0.5mA/240VAC		
OUTPUT	DC VOLTAGE	12V	24V	48V
	RATED CURRENT	16A	10A	5A
	CURRENT RANGE	0～16A	0～10A	0～5A
	RATED POWER	192W	240W	240W
	RIPPLE&NOISE (max.)	150mVp-p	150mVp-p	200mVp-p
	VOLTAGE ADJ.RANGE	12～14V	24～28V	48～55V
	VOLTAGE TOLERANCE	±1%	±1%	±1%
	LINE REGULATION	±0.5%	±0.5%	±0.5%
	LOAD REGULATION	±2%	±1%	±1%
	SETUP, RISE TIME	500ms,50ms/230VAC 500ms,50ms/115VAC		
	HOLD UP TIME(Typ.)	14ms/230VAC 14ms/115VAC		
PROTECTION	OVER LOAD	130%~160% rated output power		
		Protection Mode: hiccup mode，recovers automatically after fault condition is removed		
	OVER VOLTAGE	15～18V	29～35V	56～65V
		Protection mode: Shut down, recovers after repower on		
	OVER TEMPERATURE	Protection mode: Shut down, recovers after temperature drop		
FUNCTION (ADR-240R)	DC OK SIGNAL(OPTIONS)	Contact specifications (max.):30VDC/1A Resistive load		
	REDUNDANCY(OPTIONS)	Protection for parallel redundancy use: In parallel redundancy applications, when one power supply experiences abnormal shutdown, the other power supply will automatically activate. This can prevent system crashes and increase system reliability.		
ENVIRONIMENT	WORKING TEMP.,HUMIDITY	-30～+70℃ (Refer to "Derating curve") , 20～90%RH non-condensing		
	STORAGE TEMP.,HUMIDITY	-40～+85℃, 10～95%RH		
	TEMP. COEFFICIENT	±0.03%/℃ (0～50℃)		
	VIBRATION	10～500Hz, 2G 10min./1 cycle, each along X、Y、Z axes		

Safety and electromagnetic compatibility	Safety standards	Refer to UL62368-1,TUV EN62368-1,CCC GB4943.1		
	Withstand voltage and isolation resistance	I/P-O/P: 3KVac; 100MΩ / 500Vdc / 25℃ / 70%RH		
		I/P-FG: 2KVac; 100MΩ / 500Vdc / 25℃ / 70%RH		
		O/P-FG: 0.5KVac; 100MΩ / 500Vdc / 25℃ / 70%RH		
	Electromagnetic compatibility emission	Parameter	Standard	Test Level / Note
		Conducted emission	BS EN/EN55032(CISPR32),FCC PART 15 / CISPR22 ,GB9254.1	Class B
		Radiated emission	BS EN/EN55032(CISPR32),FCC PART 15 / CISPR22 ,GB9254.1	Class B
		Harmonic current	BS EN/EN61000-3-2,GB17625.1	Class A
		Voltage flicker	BS EN/EN61000-3-3	----
	Electromagnetic compatibility immunity	BS EN/EN55035		
		Parameter	Standard	Test Level /Note
		ESD	BS EN/EN61000-4-2	Level 4, 15KV air, Level 2, 8KV contact, criteria A
		RF field susceptibility	BS EN/EN61000-4-3	Level 3, 10V/m,criteria A
		EFT bursts	BS EN/EN61000-4-4	Level 3, 2KV/5KHz,criteria A
		Surge susceptibility	BS EN/EN61000-4-5	Level 4, 2KV/L-N, 4KV/L/N-FG criteria A
		Conducted susceptibility	BS EN/EN61000-4-6	Level 3, 10V,criteria A
		Magnetic field immunity	BS EN/EN61000-4-8	Level 4, 30A/m,criteria A
		Voltage dips and interruptions	BS EN/EN61000-4-11	>95% dip 0.5 periods, 30% dip 25 periods , >95% interruptions 250 periods
OTHERS	MTBF	≥300Khrs MIL-HDBK-217F(25℃)		
	DIMENSION	30*125.1*110mm(W*H*D)		
	PACKING	0.6Kg; 24pcs/ 15.4Kg/ 0.83CUFT		
NOTE	1. All parameters NOT specially mentioned are measured at 230VAC input, rated load and 25℃ of ambient temperature. 2. Ripple & noise are measured at 20MHz of bandwidth by using a 12" twisted pair-wire terminated with a 0.1uF & 47uF parallel capacitor. 3. Tolerance: includes set up tolerance, line regulation and load regulation. 4. Line regulation is measured from low line to high line at rated load. 5. Load regulation is measured from 0% to 100% rated load. 6. Length of set up time is measured at cold first start, Turning ON/OFF the power supply very quickly may lead to increase of the set up time. 7. The ambient temperature derating of 5℃/1000m is needed for operating altitude great than 2000m(6500ft). 8. The power supply is considered a component which will be installed into a final equipment. All the EMC tests are been executed by mounting the unit on a 360mm*360mm metal plate with 1mm of thickness. The final equipment must be re-confirmed that it still meets EMC directives. 9. Installation clearances:40mm on top,20mm on the bottom,5mm on the left and right side are recommended when loaded permanently with full power. In case the adjacent device is a heat source, 15mm clearance is recommended.			

Mechanical specification

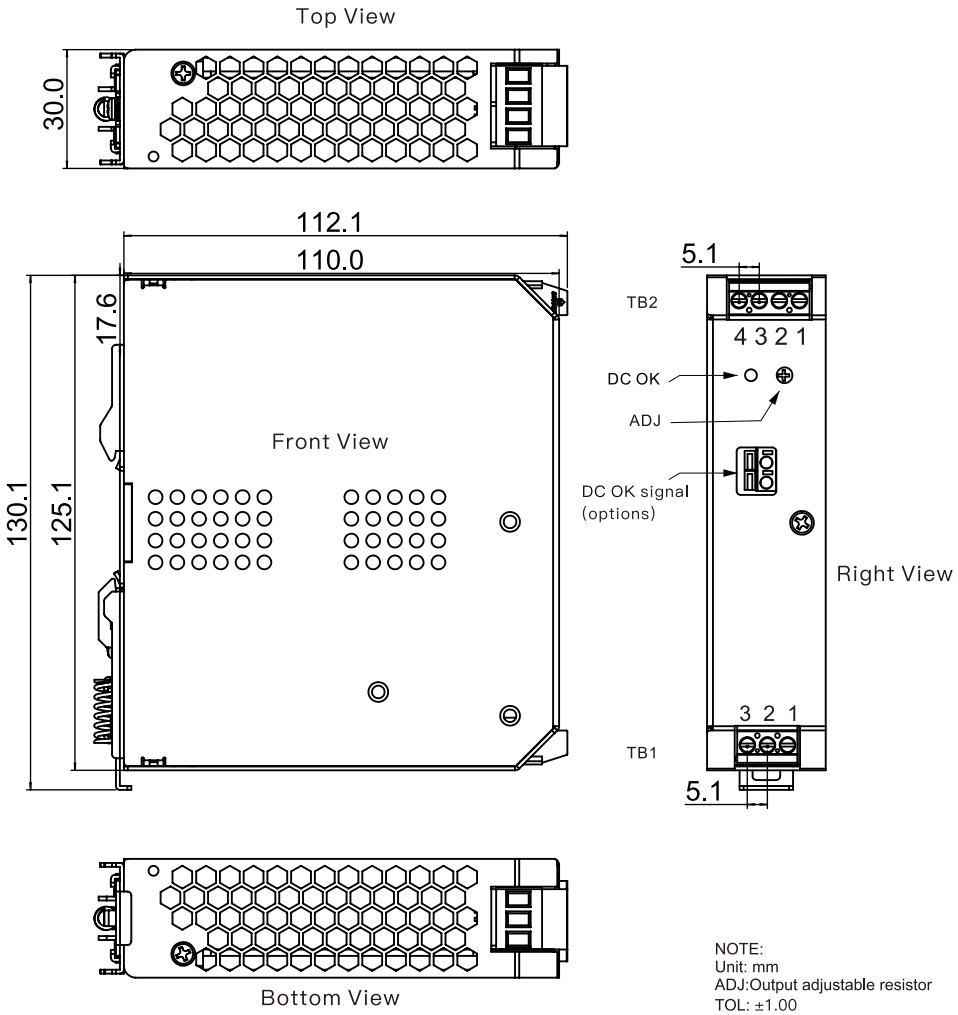

NOTE:
Unit: mm
ADJ:Output adjustable resistor
TOL: ±1.00

ADMISSIBLE DIN-RAIL:TS35/7.5 或 TS35/15

Terminal Pin No. Assignment

TB1		TB2	
Pin No.	Assignment	Pin No.	Assignment
1	AC/L	1,2	DC output –V
2	AC/N	3,4	DC output +V
3	FG		

Block diagram

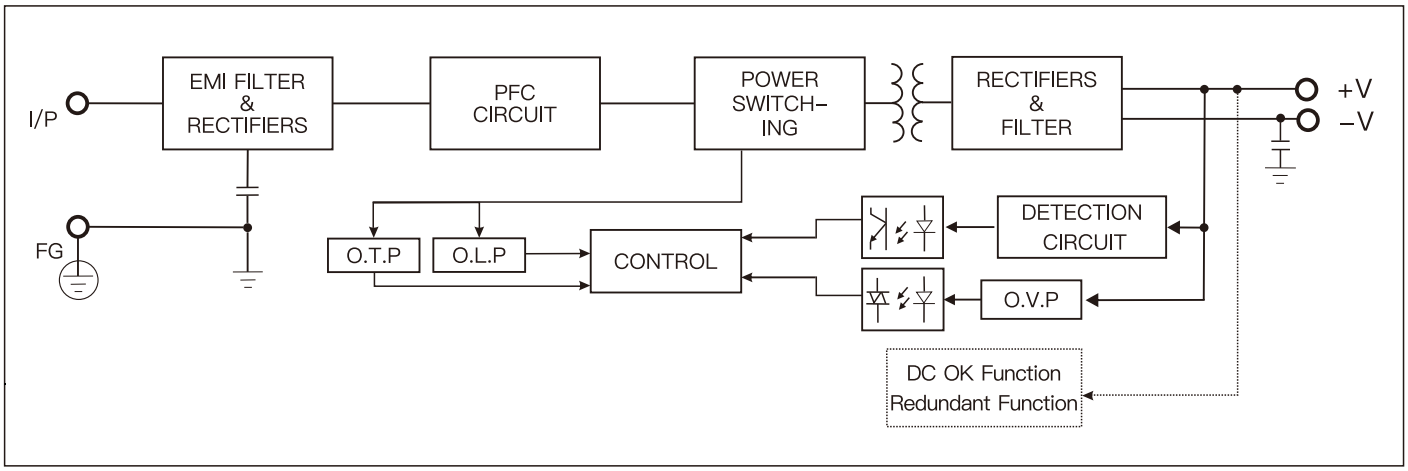

Derating curve

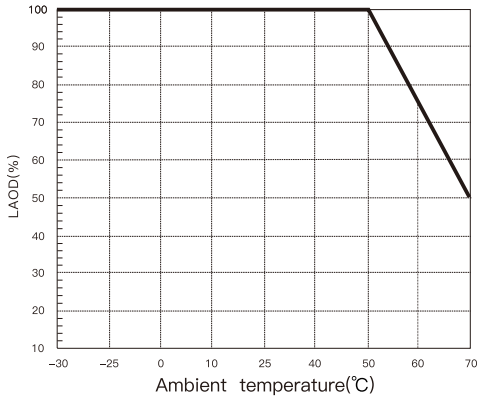

Static characteristics

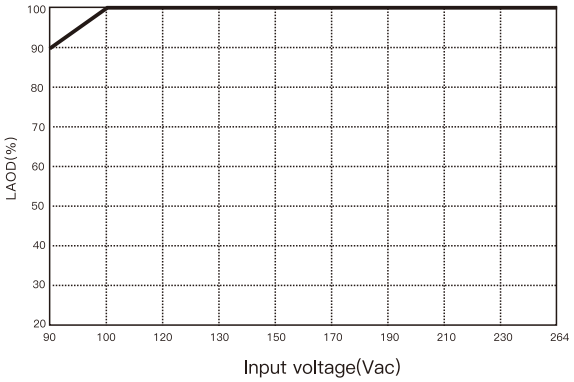

DC OK Relay Contact(Options)ADR-240R

Contact closure	Power on/DC ok
Contact open	Power off/DC fail
Contact specifications (max.)	30V/1A Resistive load

Redundancy function(Options)ADR-240R

1, Built in redundancy function, capable of parallel connection of 2 single machines
2, When running in parallel, the maximum load should not exceed the rated power of any one power source

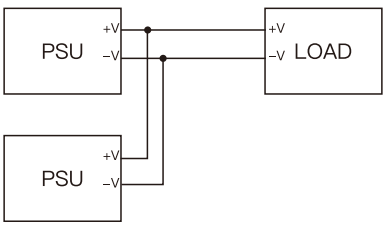

CONTACT XGW

XGW Digital Technology (Shenzhen) Co., Ltd.

Email: sales@xgwtech.com

Tel / WhatsApp / WeChat: +86 15012788278

Web: www.xgwtech.com

LinkedIn: linkedin.com/in/leddriverandenergystoragesystem/

LED drivers & power supplies | UPS & LiFePO4 / ESS batteries

Manufacturer with two owned factories in Shenzhen and Zhongshan.

OEM/ODM - custom & project development welcomed; 3-7 day samples.